APATINIS

	85 Liter	Remarks
ALL BOLTS WITH LOCTITE 270		
Bearing Margins Pinion POS 50	(see remark)	In combination with POS 04 -> take pinion axial margins
Bearing Margins Pinion POS 04	(see remark)	In combination with POS 50 -> take pinion axial margins
Bearing Margins Pr Sh POS 21	(see remark)	In combination with POS 09 -> take propeller shaft axial margins
Bearing Margins Pr Sh POS 09	(see remark)	In combination with POS 21 -> take propeller shaft axial margins
Bearing Margins Pinion	0.00 mm △	
Bearing Margins Prop Shaft	0.10 - 0.15 mm	
Tooth Clearance	0.21 - 0.35 mm	

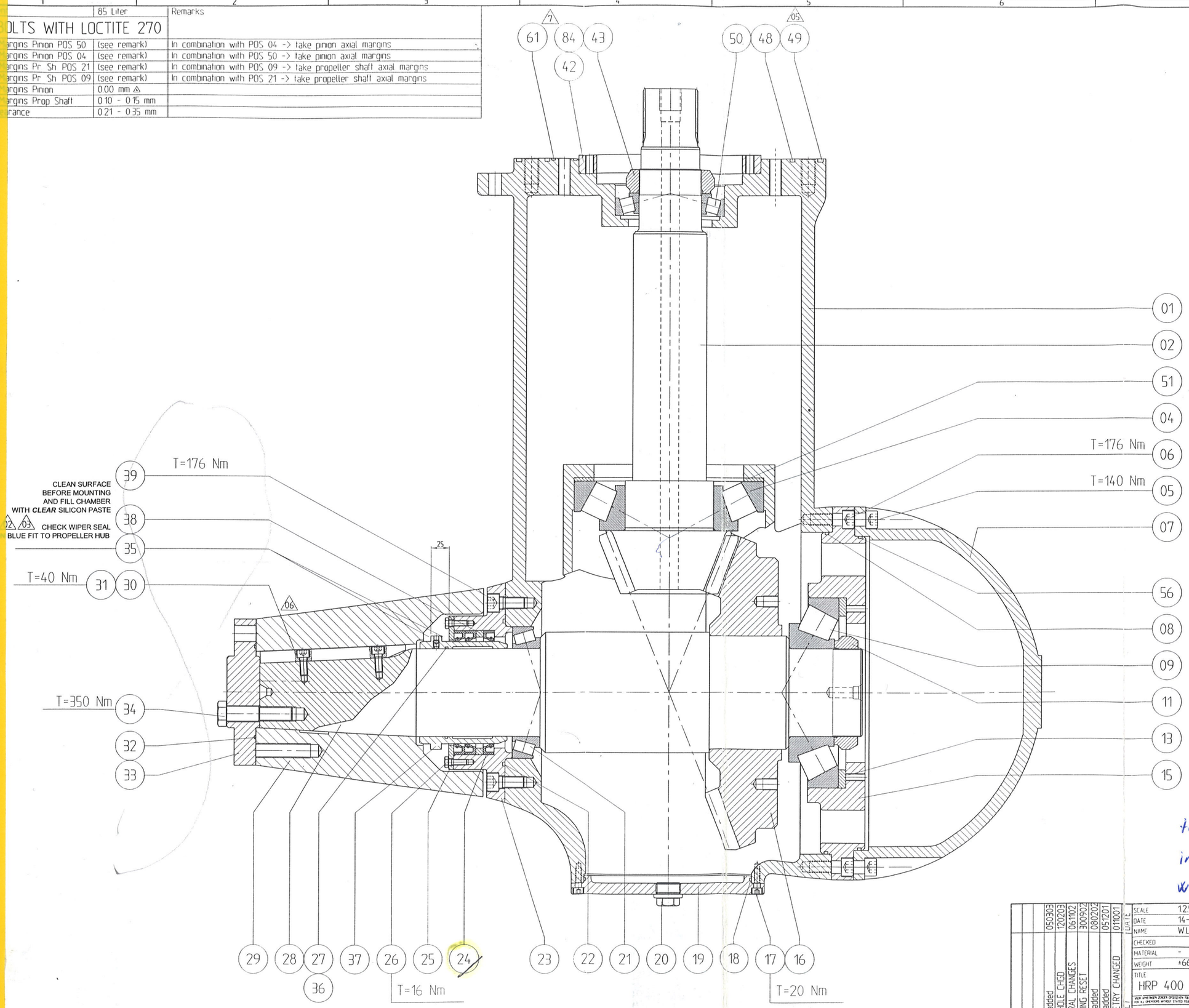

ZF Friedrichshafen AG
(Germany)

tel. +31 180 519988
info@hzp.nl
www.hzp.nl ⇒ www.zf.com/marine

REV	SCHAL		DATE
7	M	Bolt added	050303
6	M	KEY HOLE CHGD	120203
5	M	SEVERAL CHANGES	061102
4	M	MARGING RESET	300903
03	M	Note added	080202
02	BV	Note added	051201
1	M	GEOMETRY CHANGED	011001

SCALE	1:25	REMARKS	
DATE	14-01-01		
NAME	W.Leenes		
CHECKED			
MATERIAL	-	CLASSIFICATION	PAINT SYSTEM
WEIGHT	±662 kg		
TITLE	HRP 400 LOWER GEARBOX		

HRP THRUSTER SYSTEMS
Zaag 27
P.O. Box 2020
2930 AA Krimpen aan de Lek
Holland
E-mail ID info@hrp.nl
Site HTTP://www.hrp.nl
Phone +31 (0)180 - 519988
Fax +31 (0)180 - 519256

A1

DRAWING NR 0800x40007

ORDER NR